CHALCO ELEVEN LTD

"CHALCO HOUSE"
NETHER ASHENTILLY
MARYCULTER
ABERDEEN
AB12 5GQ

TEL (44)-(0)-1224 733321
E-Mail: ce@chalco.co.uk

FAX (44)-(0)-1224 733685
www.chalco.co.uk

OPERATING MANUAL

MODEL HYPER DIGITAL CE03-BC

CONTENTS

1.0 GENERAL

2.0 SPECIFICATIONS

3.0 OPERATING CONTROLS

4.0 CONNECTING DETAIL

5.0 BLOCK DIAGRAMS

1.0 GENERAL

Hyper Digital CE03-BC offers Commercial/Naval Divers and Underwater Investigators a new level of technology in their search for high quality underwater video footage along with data collection in Dive Control. The System offers a twin screen along with video overlay/ GPS, heading and sonar data (all overlays are optional). Digital video recording is on to DV Tape and Memory Stick. To complement the DV recording, the Camera used needs to be true digital processing which allows the user to interrogate its image in detail.

All facilities of the Hyper Digital CE03-BC Systems are included with the level of engineering upgraded to satisfy military and naval standards. The System offers greater versatility than ever before for professional or military applications. The System is compatible with any of the Hyper Digital range of high resolution, fixed or optical zoom, wide angle lens Cameras and accessories. System accessories include Lights and Video-Writer. The CE03-BC offers a visual LED readout of Diver depth measured in MSW. There is also a Memory Stick supplied with the Controller (128MB) which allows the user to record video or photos on to the Memory Stick. This is totally independent to the DV Tape.

On initial power-up, the DV Recorder will automatically switch on. The screen will go blue indicating time and date. The DV Recorder allows Camera, DV playback and Memory Stick playback. Sound can be heard as well as picture playback on the main screen as well as the DV LCD display.

There is a USB and a DV Lead which allows the user to connect to a PC along with the software supplied. Once loaded, the video or photos can be directly accessed or copied to the PC.

The Total System

A Peli Case consisting of :
a) 1 off 7” LCD Colour Monitor
b) 1 set Operating Controls
c) 1 off Sony GVD-1000 Mini DV Recorder with LCD Screen

Aluminium Case consisting of :
d) 1 off CC620ZX1 Underwater Camera
e) 1 off CC-12-50L Underwater Camera Light
f) 1 off ‘Y’ Splice Incorporating Depth Sensor
g) 1 off Complete Mounting Bracketry for Camera and Light
h) 1 off European 220V AC Power Lead
i) 1 Set Operating Manuals and Software CD

Reel consisting of :
j) 1 off 100M Umbilicals CE1C/9-100UC

CONTROLS

The Camera Controller is designed for topside use, and all controls are in the Peli Case. **There is no internal circulating fan, therefore, there must be sufficient air circulation in order to keep the internal components cool.**

The Hyper Digital Unit CE03 can run off two types of voltage. When running on AC, the On/Off Switch and the Light Switch act in the following manner :

Once pressed, they will mechanically illuminate (Power Switch Red) (Light Switch Green) and the System will activate. The LCD Monitor will illuminate blue and the DV Recorder will switch on if the switch is in the on position. The LCD for the Camera will read between 17-19 volts thus indicating there is power being transmitted to the Umbilical.

When the Light is switched on for the first time, the Dimmer Switch must be set anti-clockwise otherwise the Light may not come on. You must repeat the procedure.

12V DC operations, the Power Switch and the Light Switch work in reverse. When the Switches are illuminated, the System is off. When the Switches are not illuminated, the System is on. **Do not leave your 12V DC connected at the same time as the AC otherwise the System will not be able to switch off.**

There is also an audio input situated bottom right. This allows the user to record the audio sound from the Air Diver's Radio on to the DV Recorder. No more than 120mv of audio signal to the audio input should be applied. The audio signal will be recorded on both channels simultaneously (left and right).

The Controller is equipped with the following controls :

Camera On/Off Switch
Camera Power LCD Digital Readout
Light On/Off Switch
Light Power LCD Digital Readout
Light Dimmer
Battery Condition Meter
Depth Readout
See Operating Manual for DV Recorder.

When using the System on 12V DC, make sure the polarity is in the correct way. Positive must go to red and negative must go to black. If connected in the wrong way YOU WILL CAUSE DAMAGE TO THE SYSTEM.

2.0 SPECIFICATIONS

CAMERA CONTROLLER

SUPPLY VOLTAGE :	90-240V AC 50/60 Hz
OUTPUT VOLTAGE CAMERA :	15V-19V DC
OUTPUT VOLTAGE LIGHT :	0V-19V DC
INPUT SIGNAL :	Composite Video 75Ω
OUTPUT SIGNAL :	Composite Video 75Ω
OPERATING TEMPERATURE :	-5°C to +50°C

CAMERA

OPERATING VOLTAGE :	15V-19V DC
OUTPUT SIGNAL :	Composite Video 75Ω
OPERATING DEPTH :	1500 ft
OPERATING TEMPERATURE :	-5°C to +50°C
SIZE :	50mm Diameter x 90mm long excluding interconnect socket

LIGHT

OPERATING VOLTAGE :	12V DC
OPERATING CURRENT :	2.5 Amps at full intensity
BEAM ANGLE :	Wide
OPERATING DEPTH :	1500 ft
OPERATING TEMPERATURE :	-5°C to + 90°C
SIZE :	50mm Diameter x 90mm long excluding interconnect socket

3.0 OPERATING CONTROLS

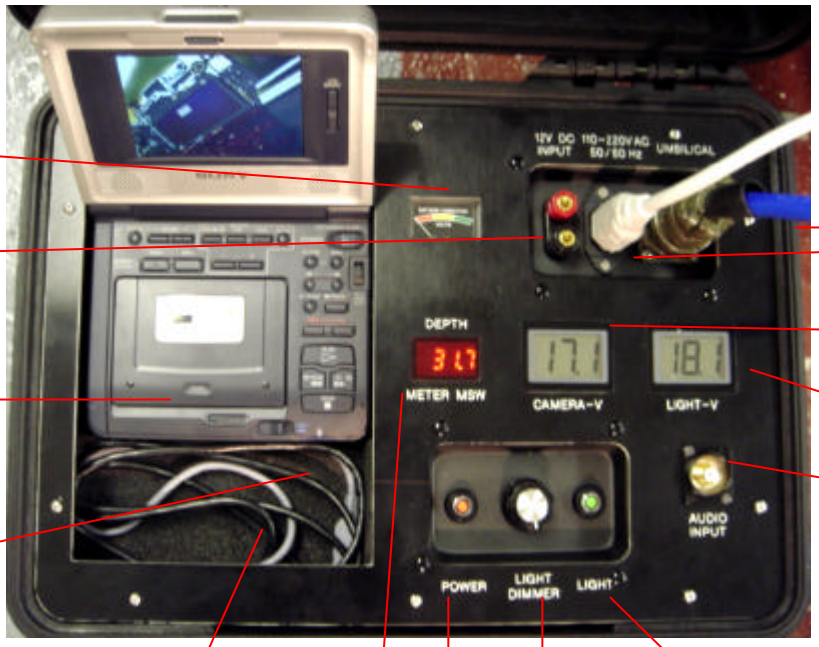

On/Off Switch

The Power On/Off Switch is situated bottom centre of the Unit. When pressed, if illuminated and AC power is connected, this will apply voltage to the Camera and the rest of the System apart from the Light. Also see Controls.

Light Switch

The Light On/Off Switch is situated bottom centre of the Unit. When pressed, if illuminated and AC power is connected, this will apply voltage to the Light Controller and the Light LCD will read the appropriate voltage. Must have the Dimmer Switch set fully anti-clockwise. Also see Controls.

Light Dimmer

The Light Dimmer is situated bottom centre of the Unit. On initial switch-on it must be set fully anti-clockwise, then slowly turn clockwise to increase the intensity of the Light and the LCD will indicate the appropriate voltage being applied to the Light via the umbilical.

Battery Meter

The Battery Condition Meter monitors the voltage and gives a rough indication. If indicating Green to Yellow – the System can function adequately. The duration will depend upon the amount of amperage stored in the Battery.

Depth Meter

The Depth Meter will only be activated once the 'Y' Splice with the appropriate sensor is connected. It will illuminate red, it may have a minus sign.

As soon as the Diver enters the water, the Meter will read in MSW.

The Meter is calibrated with the sensor in the 'Y' Splice and should be accurate to ± 0.4M.

Mini DV Recorder

On initial power-up, the Mini DV Recorder will automatically switch on. The screen will go blue indicating time and date. A green LED will illuminate and stay illuminated until switched off. If the above does not happen, switch on the Mini DV Recorder. The Mini DV Recorder must be switched on at all times in order to view Cameras or for playback, sound can be heard as well as picture playback on the main screen as well as the LCD display. For all other instructions and features, please refer to separate Mini DV Operating Manual.

CONTROLS FOR MEMORY STICK

128MB MEMORY STICK

PHOTO AND VIDEO

4.0 CONNECTING DETAIL

'Y' SPLICE

12 WAY MALE TO UMBILICAL		4 WAY FEMALE TO CAMERA	2 WAY FEMALE TO LIGHT	DESCRIPTION
1	Red	Red		CAMERA POWER +V
2	Green	Green		CAMERA POWER -V
3	Black	Black		SCREEN-VIDEO COAX
4	White	White		CORE-VIDEO COAX
5	Orange	-------	White	LIGHT POWER +V
6	Blue	-------	Black	LIGHT POWER -V
7	Red			DEPTH SENSOR O/P

CC620ZX1 CAMERA / LIGHT

4 PIN MALE SS		DESCRIPTION
1	Black	SCREEN-VIDEO COAX
2	White	CORE-VIDEO COAX
3	Red	CAMERA POWER +V
4	Green	CAMERA POWER -V

2 PIN MALE SS		DESCRIPTION
1	Black	LIGHT -V
2	WHITE	LIGHT +V

12 PIN-UMBILICAL
CE1C/9-100UC-UM

12 WAY FEMALE	UMBILICAL CE1C/9-100UC		DESCRIPTION	RACK 10 PIN
1	Yellow	1.34mm2	CAMERA POWER +V	D
2	2 x screen	1.34mm2	CAMERA POWER -V	E
3	Coax Screen		SCREEN-VIDEO COAX	B
4	Coax Core		CORE-VIDEO COAX	C
5	Green	1.34mm2	LIGHT POWER –V	H
6	White	1.34mm2	LIGHT POWER +V	A
7	Red	$0.22mm^2$	Depth Sensor	G
8	N/A			
9	N/A			
10	N/A			
11	N/A			
12	N/A			

5.0 BLOCK DIAGRAMS

1 x 100M UMBILICAL

1 x “Y” SPLICE/DEPTH SENSOR

CAMERA AND LIGHT MOUNTING BRACKETRY

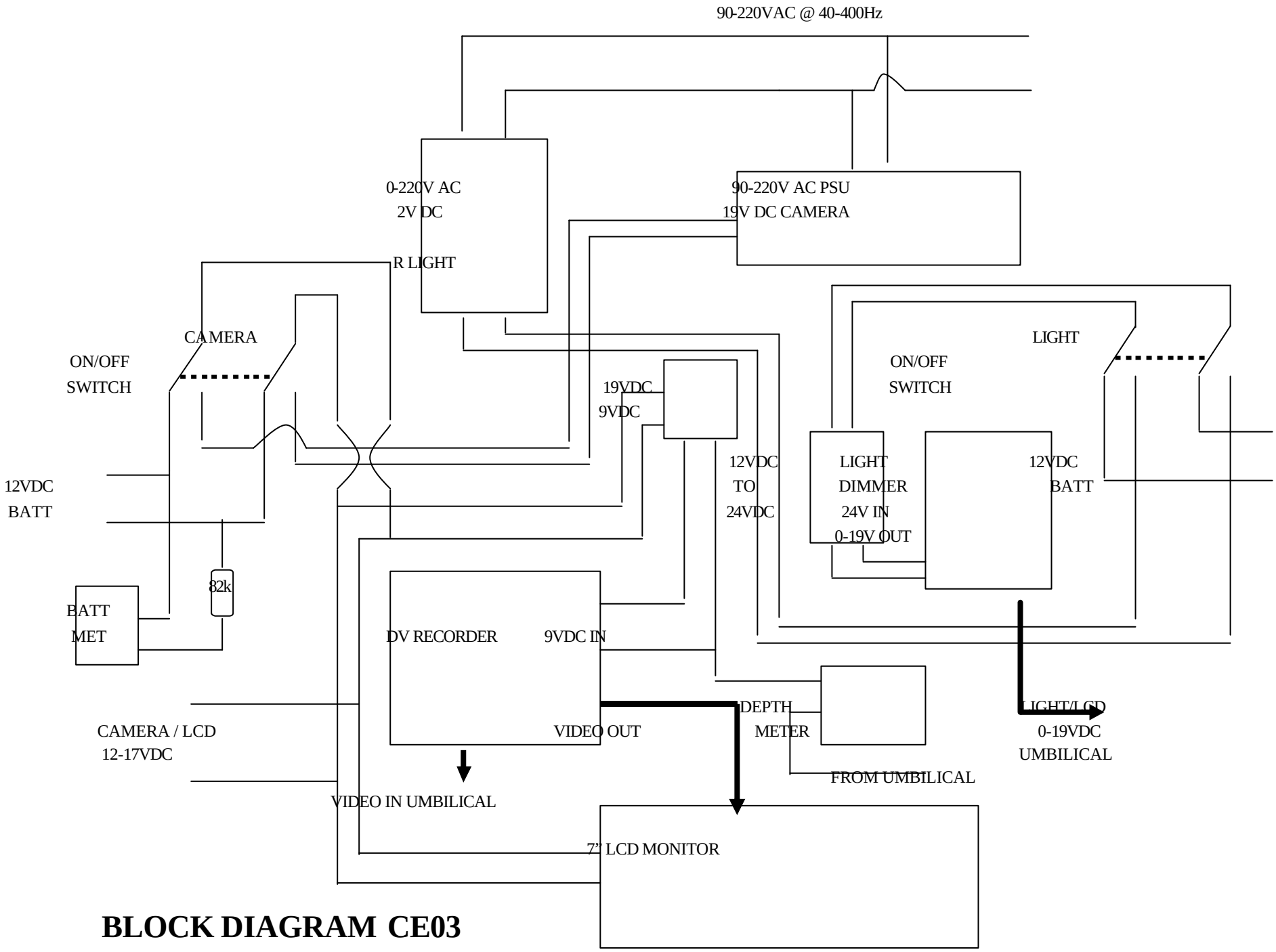

BLOCK DIAGRAM CE03

CHALCO ELEVEN LTD

"CHALCO HOUSE"
MARYCULTER WEST
ABERDEEN
AB12 5GQ

TEL (44)-(0)-1224 733321 FAX (44)-(0)-1224 733685
E-Mail: ce@chalco.co.uk www.chalco.co.uk

DIVERS HAT MOUNT CAMERA CC620ZX1

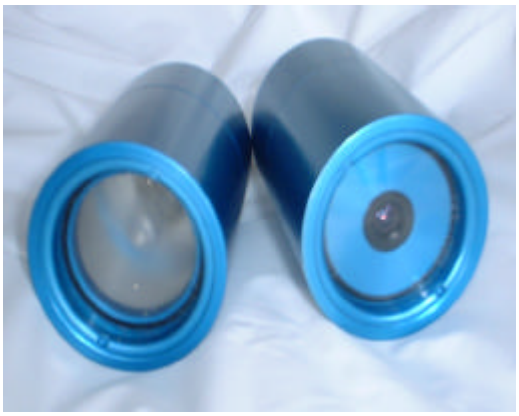

The CC620ZX1 is a high resolution Digital Colour Camera (underwater use). The Camera has a depth rating of 1500ft and is designed for harsh and unpredictable low light MSW. The CC620ZX1 is equipped with a specially developed circuitry by Chalco Eleven known as the electric eye.

The CC620ZX1's inbuilt electronic eye will monitor light levels and automatically adjust to the environment. The Camera will work down to 4 Lux producing clear, sharp colour images. The Camera decides which light wavelength is the strongest and uses that to illuminate its image. Below 4 lux the Camera will turn to monochrome producing high resolution images and as soon as the light level increases it will revert to colour.

The maximum sensitivity of the CC620ZX1 is 850nm wavelength. Due to its digital processing and the high scanning rate, the Camera is ideal for viewing objects in motion which is suitable for ROVs and mounting on the Divers Hat or hand held as an Inspection Camera. Blurring is totally eliminated. The CC620ZX1 will produce high resolution colour pictures (greater than 450 TVL) even at very low light levels. The Camera is provided with a wide angle lens enabling the user to view a very large area with a single Camera without having to adjust any controls. Focusing is automatically corrected.

It should be noted that due to the very high performance of the CC620ZX1 (a high resolution Digital Processing Colour Camera), a high resolution Colour Monitor (greater than 450 TVL) is required to match the performance of the Camera. The CC620ZX1 comes in a PAL format although NTSC is optional.

The Camera is generally used with a CE Underwater Hat Mount Diachronic Light System as illustrated above. This enhances the underwater visibility and replaces colours that are quickly lost due to the depth of water and the absence of natural light. The CC620ZX1 is fitted with a 75? coax line driver that can deliver signals up to 600M of Cable (twisted pair is optional).

The intensity of the Underwater Light is adjustable from the control panel and can be adjusted from 0-100% providing good general lighting for most types of work. The Underwater Light is fitted with a tungsten halogen 50 watt filament to complement the Camera and produces a beam angle greater than 120°.

CAMERA SPECIFICATIONS

1/4" ExView DSPCCD Chip	Total Pixels 795H x 596V
Better than 450 TV Lines	Automatic Gain Control
Electrical Auto Iris	Lens Angle 45°
Automatic White Balance Control	Composite Video 1V p-p
Colour and Monochrome	50mm D x 90mm L excluding connector (Camera)
Auto Focus	50mm D x 90mm L excluding connector (Light)
15 - 20V AC/DC @ 250mA (Camera)	Working Depth of 1500ft MSW

CHALCO ELEVEN LTD

"CHALCO HOUSE"
MARYCULTER WEST
ABERDEEN
AB12 5GQ

TEL (44)-(0)-1224 733321
E-Mail: ce@chalco.co.uk

FAX (44)-(0)-1224 733685
www.chalco.co.uk

SUB-SEA CABLES

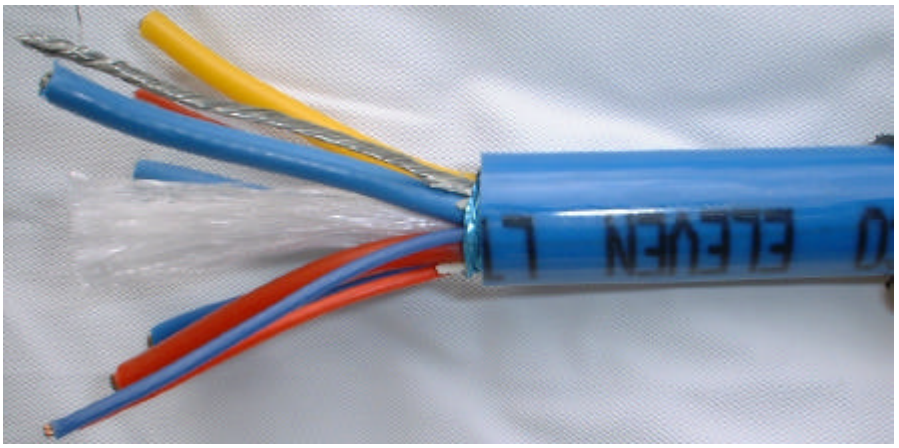

DESCRIPTION : SUB-SEA CAMERAS TELEMETRY CABLE CE2C/8-100UC 2.00MM BLUE POLYURETHANE SHEATHED 13MM OUTSIDE DIAMETER

Physical Detail

2 x 75? Low Loss Mini Coax
3 x 1.5mm^2 Copper Conductors
2 x 0.5mm^2 Copper Conductors
2 x 0.22mm^2 Copper Conductors
1 x 1mm^2 Overall Screen

Inner Cable voids filled with water blocking silicon rubber/glass micro-spheres compound.
If the outer sheath is cut, the compound stops the water from travelling up the Cable.

Mechanical Properties

Outer Sheath	Blue Polyurethane
Final Outside Diameter	13mm
Outer thickness of sheath	2.0mm
Weight of Cable in air	220kg/km
Weight of Cable in seawater	85kg/km
Minimum static bend radius	85mm
Minimum dynamic bend radius	130mm
Maximum continuous length	5000 metres
Assuming seawater density of	1026kg/m^1

CHALCO ELEVEN LTD

The Hand Held Bracketry

The Hand Held Bracketry allows the Diver to release the Camera quickly and easily via push of a button from the Helmet on to the Hand-Held Bracketry along with the Light. The Low Light Digital Camera and the wide angle of the Light illuminates the objects in front of the Diver. The Camera is focused from 5 inches to infinity with a viewing angle greater than 45o. With its digital zoom, the user can magnify by x 2 via touch of a button. The Light operates from 24V using a bio-pin tungsten halogen filament that produces clear, whiter, crisper, brighter more natural light. An average output of just below 1,000 luminance to illuminate objects for the Digital Camera.

Hand held and hat mount quick release Bracketry machined from high grade aluminium, anodised black, held by stainless steel securing bolts. Allows the Light and Camera to be securely fastened to the Hat Light or the Hand-Held Bracketry.

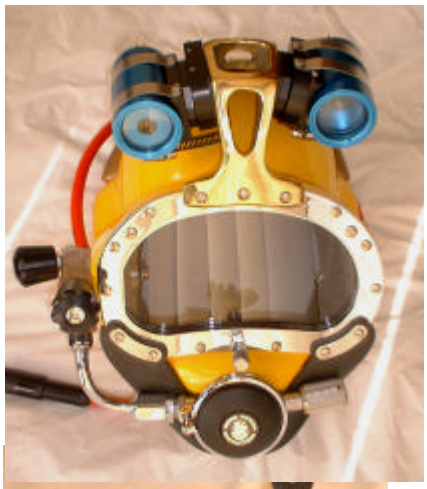

Bracketry for mounting Camera and Light along with quick release on to the Diver's Helmet. Manufactured from brass, secured via existing stainless steel fasteners. Very low maintenance. Will fit virtually any Kirby Morgan style Helmet. Acts as a carrying handle for the Helmets.

Hand-Held Bracketry manufactured from 10mm polycarbonate, over coated with a foam grip, secured by stainless steel bolts. Fitted with male and female quick release to accept any CE Camera and Light.